Product technical sheet

# SPRING 0607-1

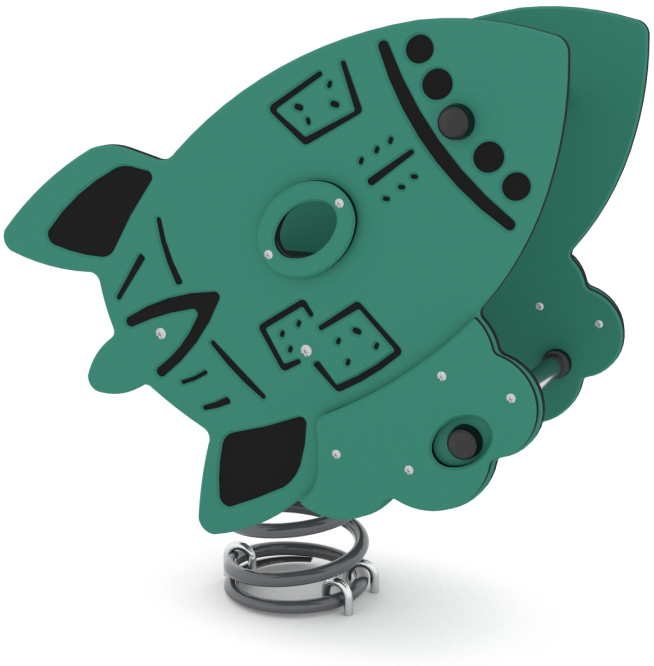

1 - 12 years | 1 kids | 10.9 m²

## Material specification

- Powder galvanized and powder coated steel construction,
- Seats and side panels made of recycled HDPE boards resistant to weather conditions, green HDPE panels made of 100% recycled materials, e.g. ocean waste such as fishing nets and ropes,
- Handles made of synthetic material,
- Steel springs 20 mm, iron phosphorated and powder coated,
- Handles made of stainless steel,
- Screws covered with plastic caps and/or stainless steel screws,

**Physical development**

rocking

**Vinci Group Sp. z o.o.**
Seminaryjna 9 Street
99-400 Łowicz

VAT: 534-250-14-46
PHONE: +48 42 203 24 99 ext. 26
M: +48 793 404 991

biuro@vinci-play.com
info@vinci-play.com
**www.vinci-play.com**

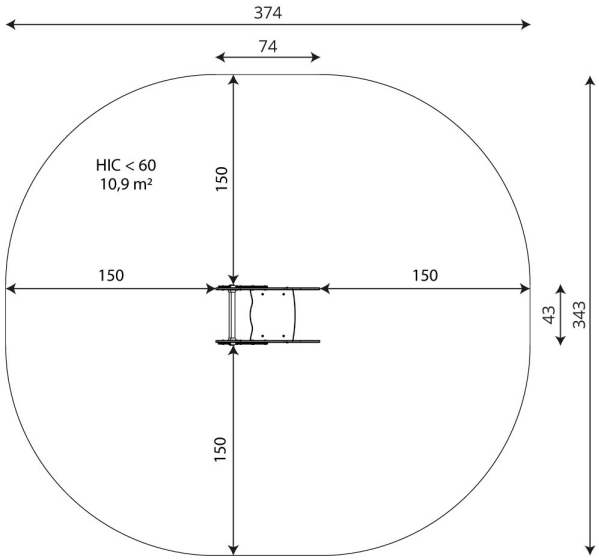


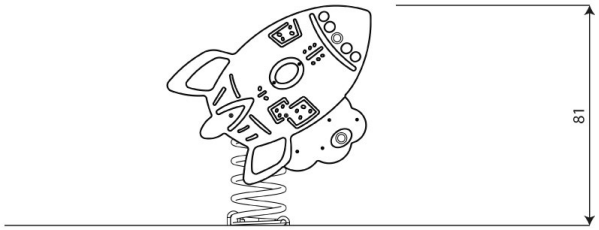


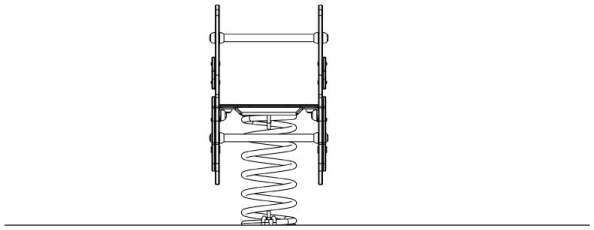

**Product technical sheet**

# SPRING 0607-1

## Product data

| | |
|---|---|
| Length | 74 cm |
| Width | 43 cm |
| Total height | 81 cm |
| Age group | 1 - 12 years |
| Number of users | 1 kids |
| Safety zone | 10.9 m2 |
| Free fall height | <60 cm |
| In accordance with norm EN | 1176-1:2017 |
| Weight of the heaviest part | 35 kg |
| Dimensions of the largest part | 80x130x43 cm |
| Availability of spare parts | YES |
| Installation time | 1,5 h |
| Color options | |

Data is subject to change without prior notice.

## Additional information

- equipment intended for public playgrounds;
- equipment has a certificate issued by an accredited entity or a declaration of conformity;
- no sharp edges or chinks that would pose a danger of jimming the head, fingers or any other body parts;
- anchoring on flat surface, 80/70/60 cm deep;
- render is for reference only, the actual appearance of the equipment and its color may vary;

## Guarantee

30 year guarantee - Structural strength of steel and stainless steel components

15 year guarantee - Structural failure of steel and stainless steel, for dynamic equipment

10 year guarantee - Structural failure of high density polyethylene and high pressure laminates components

5 year guarantee - Corrosion of stainless steel and hot dip galvanized and powder coated components; against bark beetles and rot in case of wooden structural elements

Detailed information in the guarantee card

**Vinci Group Sp. z o.o.**
Seminaryjna 9 Street
99-400 Łowicz

VAT: 534-250-14-46
PHONE: +48 42 203 24 99 ext. 26
M: +48 793 404 991

biuro@vinci-play.com
info@vinci-play.com
**www.vinci-play.com**

Product technical sheet

# SPRING 0607-1

## Surfaces according to EN 1176-1:2017

| | Description (mm) | Layer thickness (cm) | Maximum fall heights (cm) |
|---|---|---|---|
| Turf/ top layer of soil (A,B,C) | - | - | ≤100 |
| bark (A,C) | Particle size from 20 to 80 | 30 | ≤200 |
| | | 40 | ≤300 |
| woodchips (A,C) | Particle size from 5 to 30 | 30 | ≤200 |
| | | 40 | ≤300 |
| sand or gravel (A,C) | Particle size from 0,25 to 8 | 30 | ≤200 |
| | | 40 | ≤300 |
| synthetic attested (A,B,C) | Tested according to EN 1177 | | 60 |

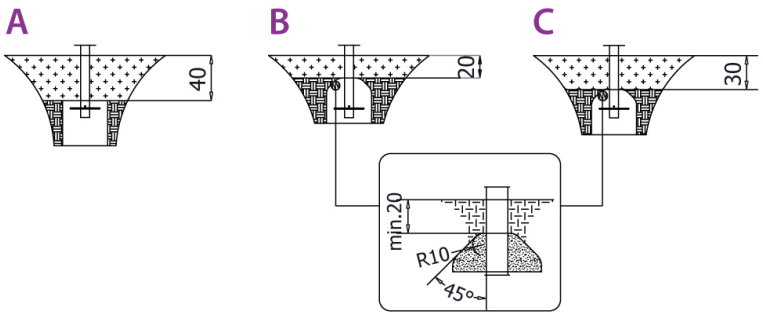


## Amount of safe surface corresponding with free fall height:

| | |
|---|---|
| HIC <60 | 10,9 m² |

Data is subject to change without prior notice.

**Vinci Group Sp. z o.o.**
Seminaryjna 9 Street
99-400 Łowicz

VAT: 534-250-14-46
PHONE: +48 42 203 24 99 ext. 26
M: +48 793 404 991

biuro@vinci-play.com
info@vinci-play.com
**www.vinci-play.com**