Product technical sheet

JUNGLE 3227

4 - 14 years

38 kids

44,1 m²





Material specification

- Powder galvanized and powder coated or stainless steel construction of 80 x 80 mm profile,
- Platforms and climbing walls made of durable anti-slip and waterproof HPL plate,
- Roofs and side panels made of durable HDPE plate, resistant to weather conditions,
- Transparent polycarbonate panels with a permanent print resistant to scratches and weather conditions
- Slides made of stainless steel with durable HDPE side panels,
- Educational paneles and moving elements made of HDPE plate, resistant to weather conditions,
- Drawing board made of durable HPL plate, resistant to weather conditions,
- Maze windows made of polycarbonate, balls made of synthetic material,
- Durable climbing stones made of polyester resin composite with mineral fillers,
- Steel ropes in polypropylene braid, connected with durable plastic elements, stainless steel or aluminum,
- Attested, safe seats,
- Calibrated stainless steel chains, preventing fingers entrapment,
- Stainless steel bars, ladders and handrails,
- Stainless steel screws and/or screws covered with plastic caps,
- Safe end caps on top of the structure made of rubber or polypropylene,

Facilitating disability

- easy access
- shelters
- integration

Intellectual development

- manipulation
- thinking

Physical development

- hiding
- sliding
- climbing
- rocking
- roofs

Vinci Group Sp. z o.o.
Seminaryjna 9 Street
99-400 Łowicz

VAT: 534-250-14-46
PHONE: +48 42 203 24 99 ext. 26
M: +48 793 404 991

biuro@vinci-play.com
info@vinci-play.com
www.vinci-play.com

1 number of towers

2 number of slides

4 number of roofs

6 number of interactive elements

4 number of activity elements

Product technical sheet

JUNGLE 3227

Product data

Length	535 cm
Width	375 cm
Total height	510 cm
Age group	4 - 14 years
Number of users	38 kids
Safety zone	44,1 m2
Free fall height	270 cm
The height of the platforms	90, 120, 150, 180, 210, 240, 300 cm
slide platform height	90, 210 cm
In accordance with norm EN	1176-1:2017
Weight of the heaviest part	65 kg
Dimensions of the largest part	8x8x510 cm
Availability of spare parts	YES
Color options	

Data is subject to change without prior notice.

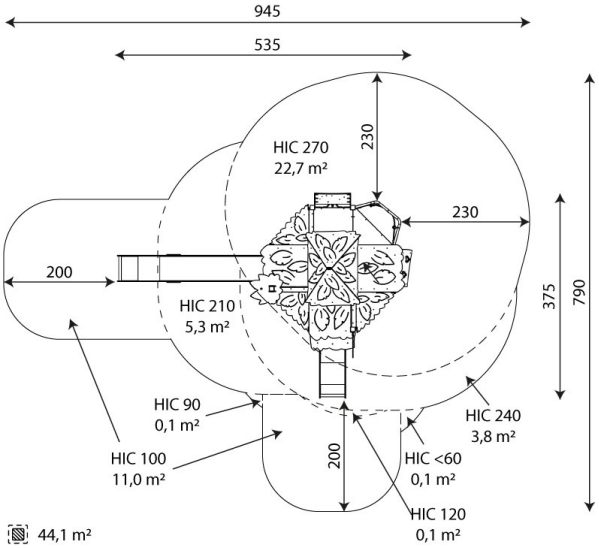

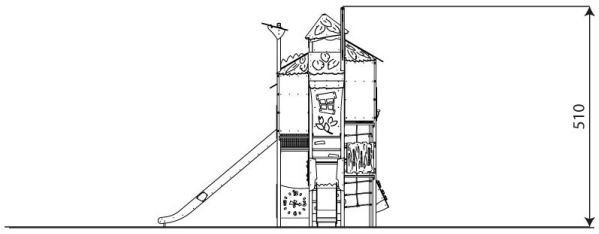

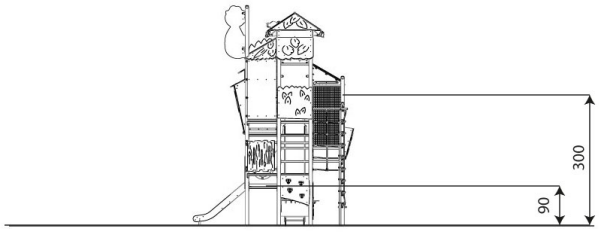

Additional information

- equipment adapted for the disabled; intended for public playgrounds;
- equipment has a certificate issued by an accredited entity or a declaration of conformity;
- no sharp edges or chinks that would pose a danger of jimming the head, fingers or any other body parts;
- anchoring on flat surface, 80/70 cm deep;
- slide should not be installed southwards;
- render is for reference only, the actual appearance of the equipment and its color may vary;

Guarantee

30 30 year guarantee - Structural strength of steel and stainless steel components

15 15 year guarantee - Structural failure of steel and stainless steel, for dynamic equipment

10 10 year guarantee - Structural failure of high density polyethylene and high pressure laminates components

5 5 year guarantee - Corrosion of stainless steel and hot dip galvanized and powder coated components; against bark beetles and rot in case of wooden structural elements

Detailed information in the guarantee card

Vinci Group Sp. z o.o.
Seminaryjna 9 Street
99-400 Łowicz

VAT: 534-250-14-46
PHONE: +48 42 203 24 99 ext. 26
M: +48 793 404 991

biuro@vinci-play.com
info@vinci-play.com
www.vinci-play.com

Product technical sheet

JUNGLE 3227

Surfaces according to EN 1176-1:2017

	Description (mm)	Layer thickness (cm)	Maximum fall heights (cm)
Turf/ top layer of soil (A,B,C)	-	-	≤100
bark (A,C)	Particle size from 20 to 80	30	≤200
		40	≤300
woodchips (A,C)	Particle size from 5 to 30	30	≤200
		40	≤300
sand or gravel (A,C)	Particle size from 0,25 to 8	30	≤200
		40	≤300
synthetic attested (A,B,C)	Tested according to EN 1177		270

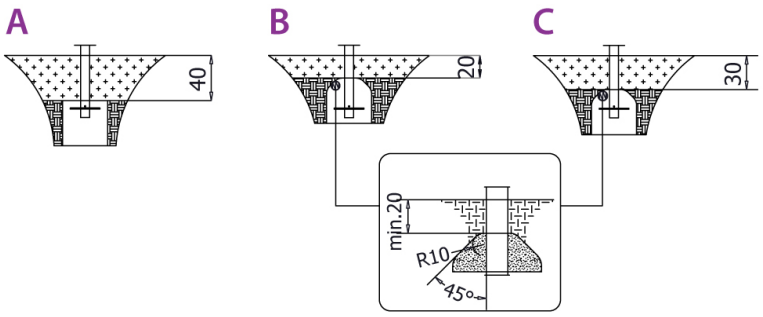

Amount of safe surface corresponding with free fall height:

HIC <60	0,1 m^2
HIC 90	0,1 m^2
HIC 100	11,0 m^2
HIC 120	0,1 m^2
HIC 210	5,3 m^2
HIC 240	3,8 m^2
HIC 270	22,7 m^2

Data is subject to change without prior notice.

Vinci Group Sp. z o.o.
Seminaryjna 9 Street
99-400 Łowicz

VAT: 534-250-14-46
PHONE: +48 42 203 24 99 ext. 26
M: +48 793 404 991

biuro@vinci-play.com
info@vinci-play.com
www.vinci-play.com