Product technical sheet

ROBINIA RB1238

3+ | 40 kids | 75,7 m²





Material specification

- Construction made of Robinia - very durable acacia wood with a diameter of ~ 18 cm without sharp edges, resistant to weather conditions,
- Platforms made of Robinia - very durable acacia wood, resistant to weather conditions,
- Side panels made of Robinia - very durable acacia wood without sharp edges, resistant to weather conditions
- Slides made of stainless steel,
- Fireman's pole made of stainless steel,
- Colorful elements made of durable HDPE or HPL plate, resistant to weather conditions,
- Moving elements made of durable HPL plate, resistant to weather conditions,
- Telescope made of stainless steel and durable HDPE plate, resistant to weather conditions,
- Flags / sails made of durable HPL plate, resistant to weather conditions,
- Rudder made of durable HDPE plate, resistant to weather conditions,
- Flowers made of durable HPL plate, resistant to weather conditions; underground installation made of synthetic material connects 2 stainless steel profiles allowing the communication,
- Steel ropes in polypropylene braid, connected with durable aluminum, stainless steel and/or plastic elements,
- Ladders made of steel ropes in polypropylene braid and rungs made of synthetic material,
- Certified, durable polypropylene rope 140 x 140 mm,
- Rubber hammock with textile reinforcement,
- Calibrated stainless steel chains, preventing fingers entrapment,
- Screws covered with plastic caps and/or stainless steel screws,

Facilitating disability

- easy access
- integration

Intellectual development

- manipulation
- music
- sight
- thinking

Physical development

- balance
- hiding
- sliding
- passage
- climbing
- rocking

Vinci Group Sp. z o.o.
Seminaryjna 9 Street
99-400 Łowicz

VAT: 534-250-14-46
PHONE: +48 42 203 24 99 ext. 26
M: +48 793 404 991

biuro@vinci-play.com
info@vinci-play.com
www.vinci-play.com

3
number of towers

2
number of slides

6
number of interactive elements

10
number of activity elements

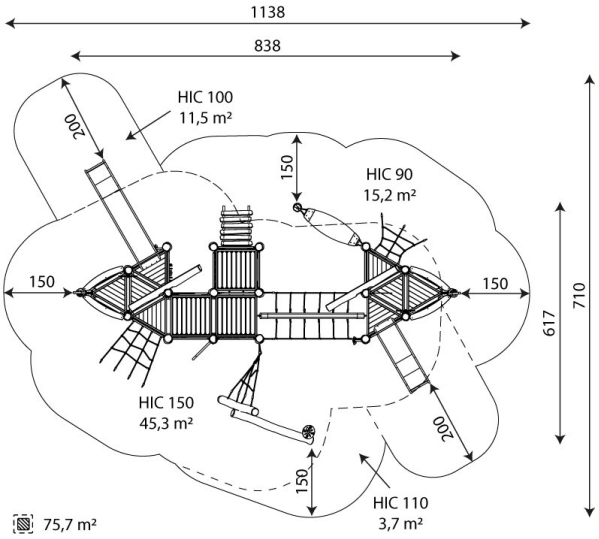

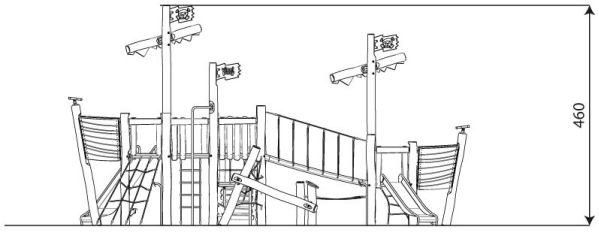

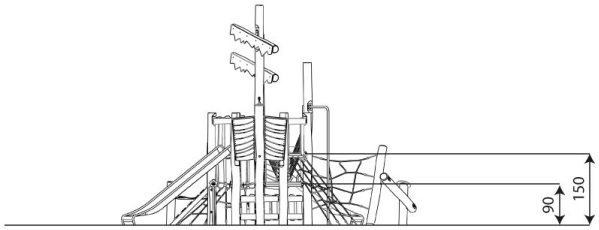

Product technical sheet

ROBINIA RB1238

Product data

Length	838 cm
Width	617 cm
Total height	460 cm
Age group	3+ years
Number of users	40 kids
Safety zone	75,7 m2
Free fall height	150 cm
The height of the platforms	90, 150 cm
In accordance with norm EN	1176-1:2017
Weight of the heaviest part	129 kg
Dimensions of the largest part	560x18x18 cm
Availability of spare parts	YES
Installation time	16,0 h

Data is subject to change without prior notice.

Additional information

- equipment adapted for the disabled; intended for public playgrounds;
- equipment has a certificate issued by an accredited entity or a declaration of conformity;
- no sharp edges or chinks that would pose a danger of jimming the head, fingers or any other body parts;
- anchoring on flat surface, 100/80/70/60 cm deep;
- slide should not be installed southwards;
- render is for reference only, the actual appearance of the equipment and its color may vary;

Guarantee

30 30 year guarantee - Structural strength of steel and stainless steel components

15 15 year guarantee - Structural failure of steel and stainless steel, for dynamic equipment

10 10 year guarantee - Structural failure of high density polyethylene and high pressure laminates components

5 5 year guarantee - Corrosion of stainless steel and hot dip galvanized and powder coated components; against bark beetles and rot in case of wooden structural elements

Detailed information in the guarantee card

Vinci Group Sp. z o.o.
Seminaryjna 9 Street
99-400 Łowicz

VAT: 534-250-14-46
PHONE: +48 42 203 24 99 ext. 26
M: +48 793 404 991

biuro@vinci-play.com
info@vinci-play.com
www.vinci-play.com

Product technical sheet

ROBINIA RB1238

Surfaces according to EN 1176-1:2017

	Description (mm)	Layer thickness (cm)	Maximum fall heights (cm)
Turf/ top layer of soil (A,B,C)	-	-	≤100
bark (A,C)	Particle size from 20 to 80	30	≤200
		40	≤300
woodchips (A,C)	Particle size from 5 to 30	30	≤200
		40	≤300
sand or gravel (A,C)	Particle size from 0,25 to 8	30	≤200
		40	≤300
synthetic attested (A,B,C)	Tested according to EN 1177		150

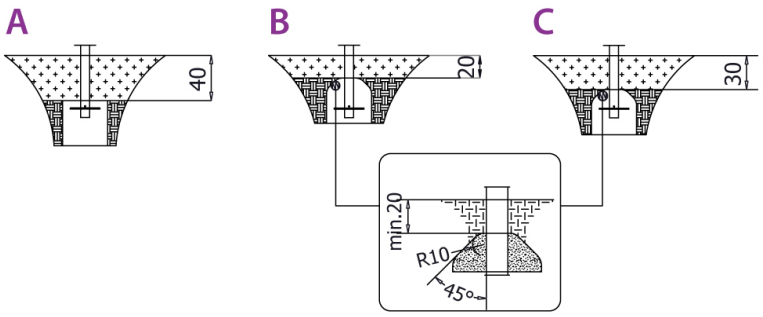

Amount of safe surface corresponding with free fall height:

HIC 90	15,2 m^2
HIC 100	11,5 m^2
HIC 110	3,7 m^2
HIC 150	45,3 m^2

Data is subject to change without prior notice.

Vinci Group Sp. z o.o.
Seminaryjna 9 Street
99-400 Łowicz

VAT: 534-250-14-46
PHONE: +48 42 203 24 99 ext. 26
M: +48 793 404 991

biuro@vinci-play.com
info@vinci-play.com
www.vinci-play.com